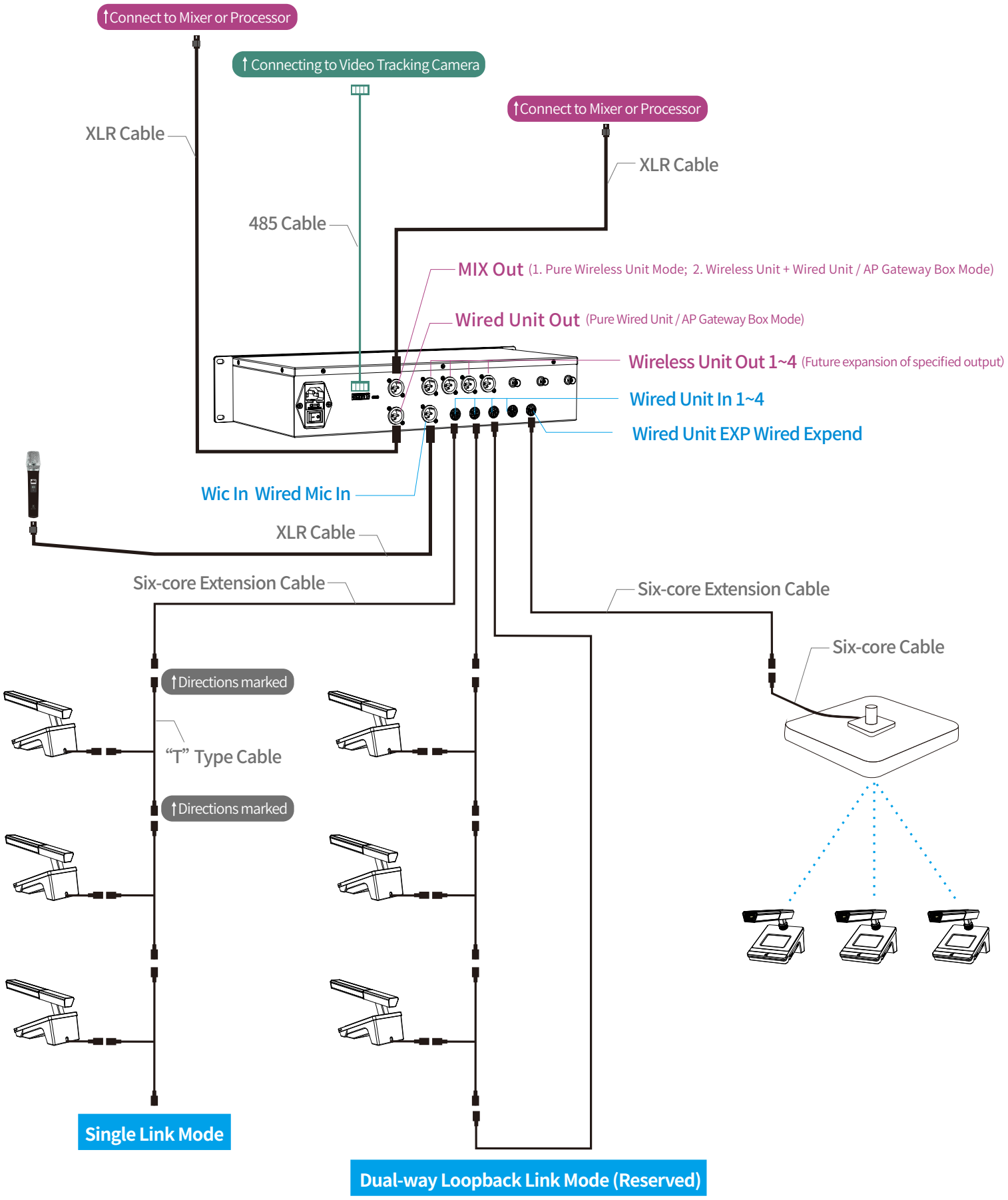Wire & Wireless Integated Digital Conference System - TOPO